015090FS	COMPRESSORE ELETTRICO 96V-144V 18CC R134a ELECTRIC COMPRESSOR 96V-144V 18CC R134a

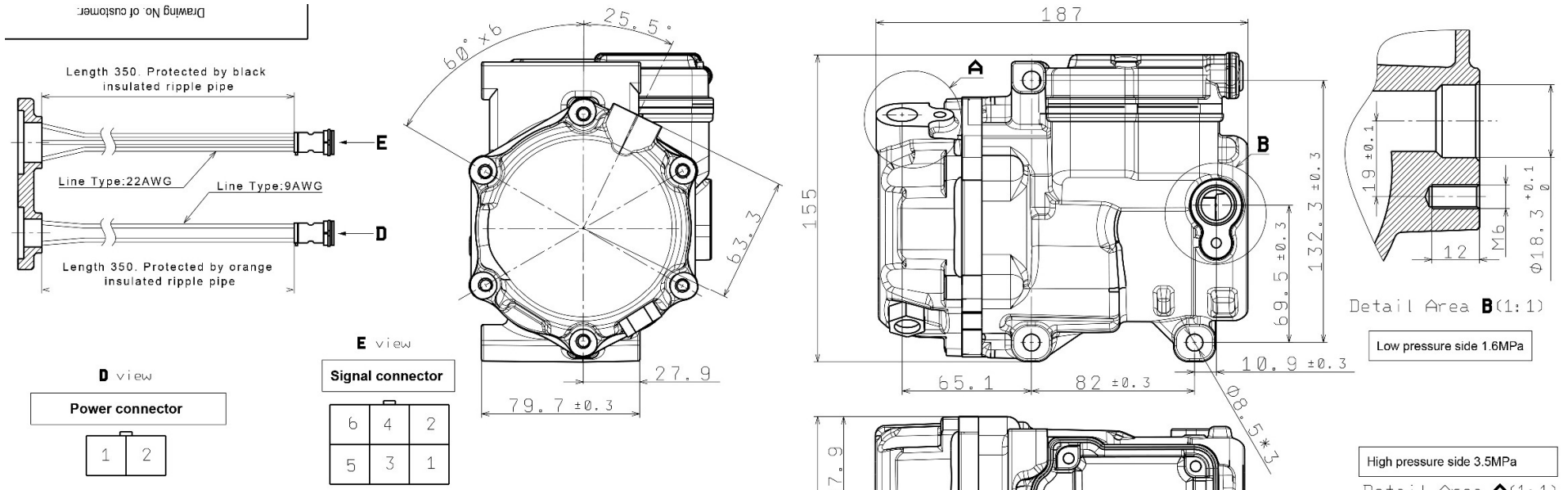

Definition of external port				
Part name	Pin	Color	Definition of port	Name of Matching part
DJ7021-8-11	1	Red	120V DC Positive pole input voltage 96V~144V DC	DJ7021-8-21
	2	Black	120V DC Negative pole input	
DJ7061Y-2-11	1	Red	Speed: 2000R/Min Connect Pin 1 and Pin 2	DJ7061Y-2-21
	2	Black	GND	
	3	Yellow	Speed: 5000R/Min Connect Pin 3 and Pin 2	
	4	Green	Speed: 3500R/Min Connect Pin 4 and Pin 2	
	5	NC		
	6	NC		

Performance parameter				
Rpm	2000	3000	4000	5000
Cooling capacity(KW)	1.16	1.81	2.48	3.16
Consuming watt(KW)	0.46	0.67	0.88	1.13
COP(Avg)	2.52	2.70	2.79	2.78
Test condition	Amdient temperature 35°C, Suction temperature17°C, Liquid temp. entering expansion valve 47°C, Condensation temperature 55°C, Evaporation 7°C.			

Information	
Displacement	18CC
Refrigerant	R134a
Refrigerant oil	RL68H/100ml
Rated voltage	120V
Speed range	2000~5000rpm
Size	187*123*155mm