015069FS	COMPRESSORE ELETTRICO 48V-95V 18CC R134a ELECTRIC COMPRESSOR 48V-95V 18CC R134a

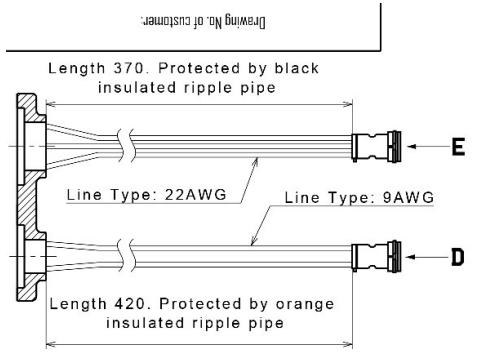

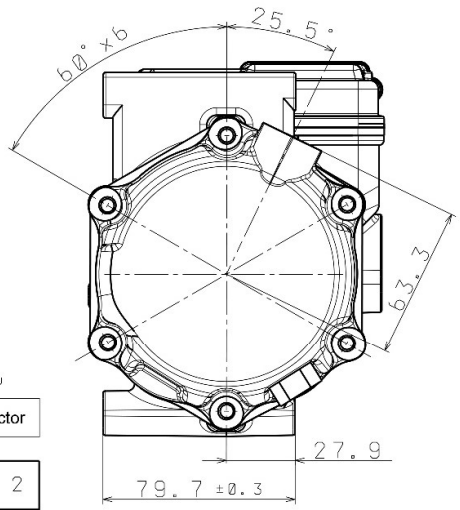

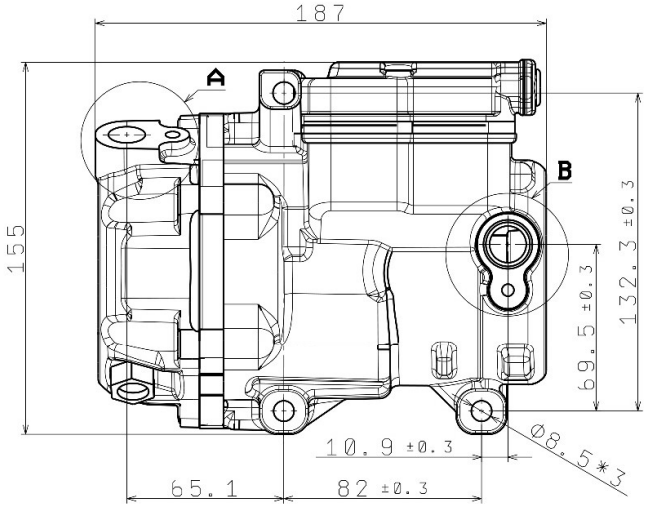

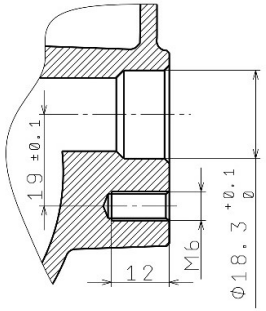

Detail Area **B**(1:1)

Low pressure side 1.6MPa

D view

Power connector

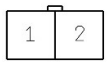

E view

Signal connector

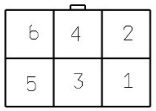

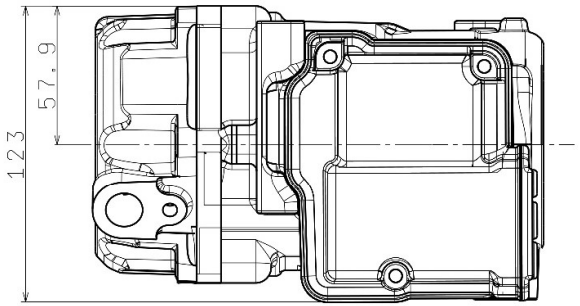

High pressure side 3.5MPa

Detail Area **A**(1:1)

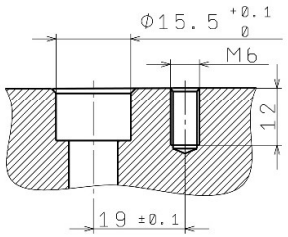

Definition of external port				
Part name	Pin	Color	Definition of port	Name of Matching part
DJ70219Y-7.8-10	1	Red	DC Positive pole input voltage 48V~95V DC	DJ70219Y-7.8-20
	2	Black	DC Negative pole input	
DJ7061Y-2-10	1	Red	Speed: 3350R/Min Connect Pin 1 and Pin 2	DJ7061Y-2-20
	2	Black	GND	
	3	Yellow	Speed: 4500R/Min Connect Pin 3 and Pin 2	
	4	Green	Speed: 3750R/Min Connect Pin 4 and Pin 2	
	5	NC		
	6	NC		

Performance parameter					
Rpm	2000	3000	4000	5000	6000
Cooling capacity(KW)	1.16	1.81	2.48	3.16	3.85
Consuming watt(KW)	0.45	0.66	0.87	1.11	1.40
COP(Avg)	2.54	2.73	2.83	2.83	2.74
Test condition	Amdient temperature 35°C, Suction temperature 17°C, Liquid temp. entering expansion valve 47°C, Condensation temperature 55°C, Evaporation 7°C.				

Information	
Displacement	18CC
Refrigerant	R134a
Refrigerant oil	RL68H/100ml
Voltage range	48~95V
Speed	3350/3750/4500rpm
Size	187*123*155mm